BONYA 0.500



KMC GLASS

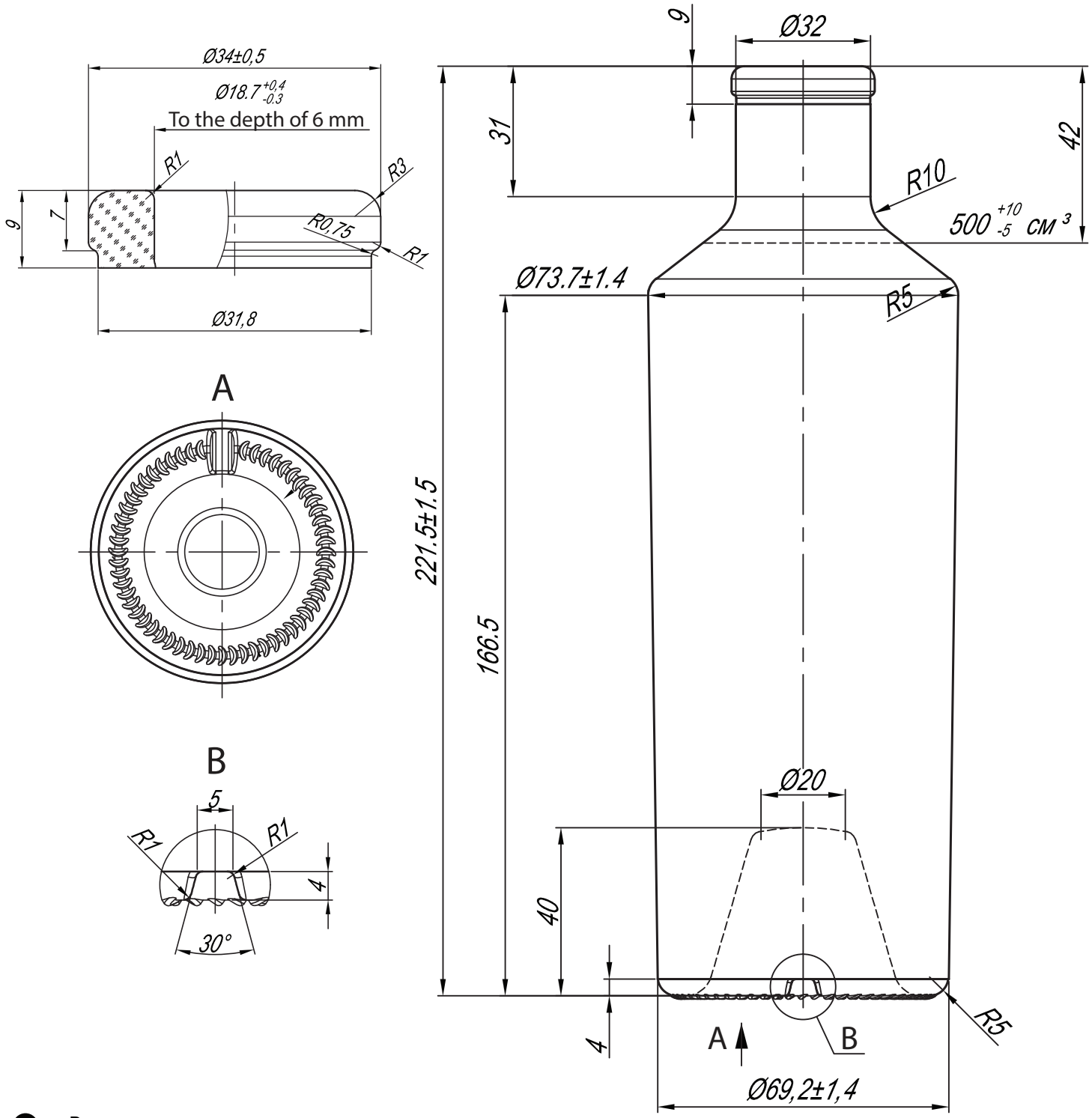

- Bonya
- Filling CAP - 500 ml
- Weight - 445±10 g
- Height - 221.5±1.5 mm
- Diameter - 73.7±1.4 mm
- Entrance Bore Diameter - 18.7±0.4 mm
- Color - Flint

www.kmc.glass
sales@kmc.glass

KMC GLASS